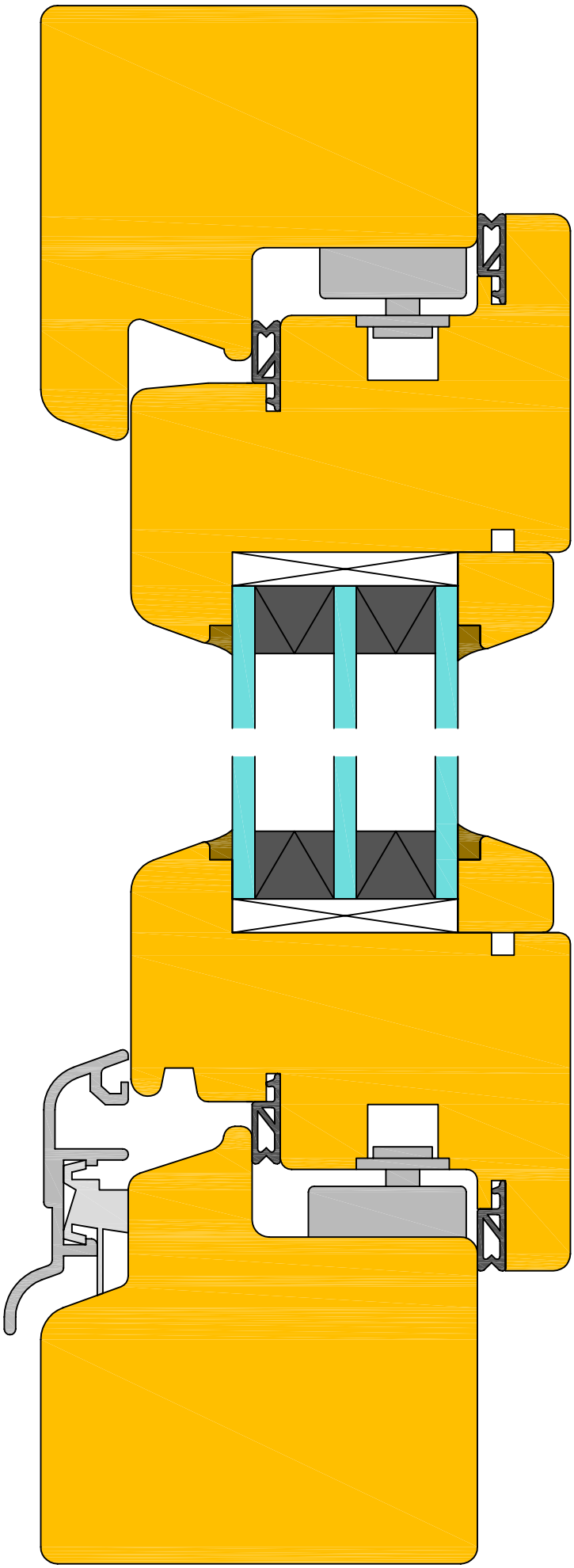

IV 78 original

Regenschiene: Alu